DIRTY HAND® TOOLS

22-Ton Half Beam Vertical/Horizontal Log Splitters

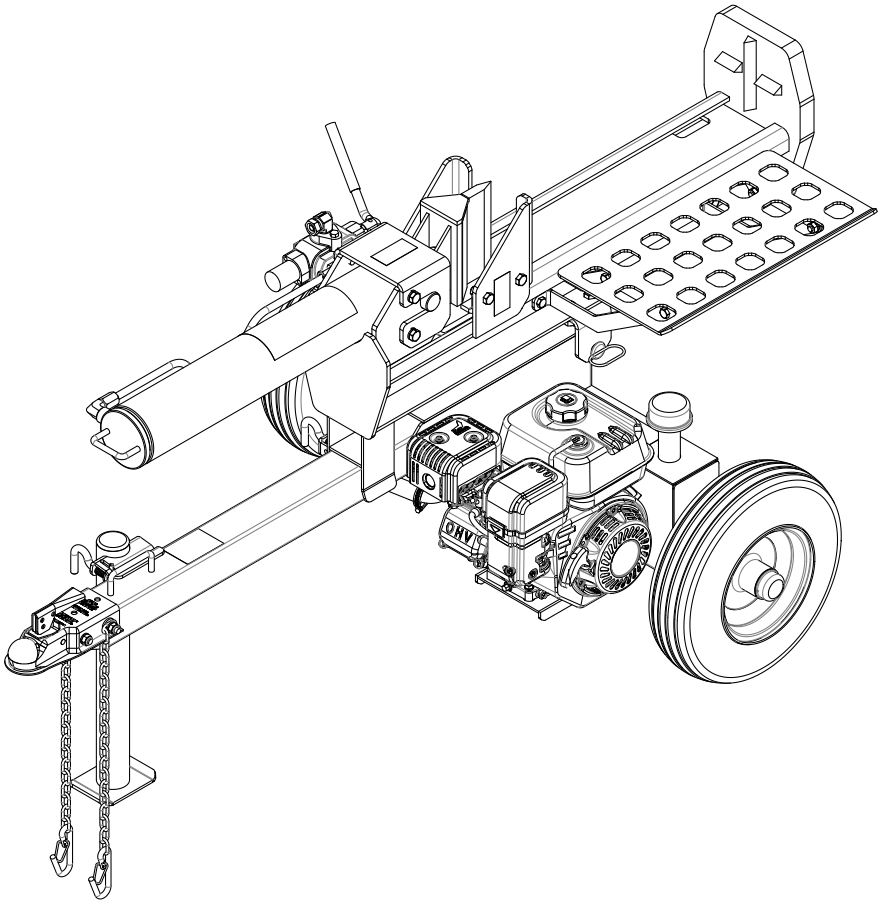

MODEL #'s 101278 (22-Ton)

Operation Manual

This safety alert symbol identifies important safety messages in this manual. Failure to follow this important safety information may result in serious injury or death.

Part # 101352 Rev A

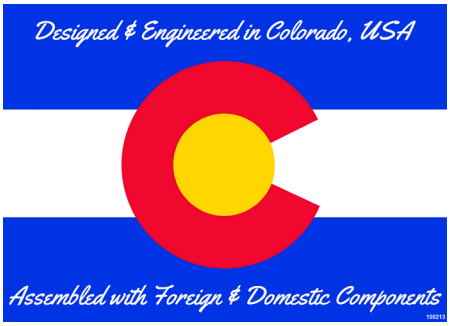

For Service or Questions

Call 1-877-487-8275

720-287-5182

www.dirtyhandtools.com

Dirty Hand Tools is a brand of

FrictionlessWorld

510 Pierce Avenue • Suite B
Louisville, CO 80027 • 720-287-5182

Table of Contents

Important Safety Information 4
- Intended Use 4
- Personal Protective Equipment 4
- Safety Decals 5
- General Safety 6
- Preparation of the Log 6
- Work Area 6
- Operation of the Log Splitter 7
- Repair and Maintenance Safety 8
- Hydraulic Safety 8
- Fire Prevention 9
- Towing Safety 10

Assembly Instructions
- 1. Assembly Overview 11
- 2. Unpacking the Container 12
- 3. Tank and Wheel Assembly 14
- 4. Tank and Tongue Assembly 15
- 5. Beam Bracket Assembly 16
- 6. Beam and Tank Assembly 17
- 7. Beam and Cylinder Assembly 18
- 8. Hydraulic Line Connection 19
- 9. Log Catcher Installation 20
- 10. Final Installation Check 20

Operating Instructions
- Operating Instructions 21
- Engine Oil Recommendations 21
- Hydraulic Oil Recommendations 22
- Starting Instructions 22
- Towing 24
- Maintenance 24

Assembly Details/Parts Lists
- Tank/Engine Assembly 25
- Pump/Engine Assembly 26
- Beam Assembly 27
- Tongue Assembly 28

Specifications & Warranty .... Back Cover

Important Safety Information

WARNING

WARNING: Read and understand the complete Operation Manual before assembling or using this product! Failure to comprehend and comply with warnings, cautions and instructions for assembly and operation could result in serious injury or death.

Do not permit children to operate this equipment at any time. Do not permit others that have not read and understood the complete Operation Manual to operate this equipment. Operation of power equipment can be dangerous. It is the sole responsibility of the operator to understand the assembly and safe operation of this product.

Call our customer service department at **720-287-5182, 1-877-487-8275,** or visit ***www.dirtyhandtools.com*** if you have any questions or concerns about the safe operation of this equipment.

DANGER

INTENDED USE

Do Not Use the log splitter for any purpose other than splitting wood, for which it was designed. Any other use is unauthorized and may result in serious injury or death.

PERSONAL PROTECTIVE EQUIPMENT

When operating this log splitter it is essential that you wear safety gear including goggles or safey glasses, steel toed shoes and tight fitting gloves (no loose cuffs or draw strings). Always wear ear plugs or sound deafening headphones to protect against hearing loss when operating this log splitter.

CAUTION

Do Not wear loose clothing or jewelry that can be caught by moving parts of the log splitter. Keep clothing and hair away from all moving parts when operating this log splitter.

CALIFORNIA PROPOSITION 65 WARNING

Engine exhaust, some of its constituents and certain product components contain or emit chemicals known to the state of California to cause cancer and birth defects or other reproductive harm.

SAFETY DECALS

Make sure all safety warning decals are attached and in readable condition. Replace missing or defaced decals. Contact Dirty Hand Tools at **1-877-487-8275** for replacement decals.

Operation Decal Part # 100212

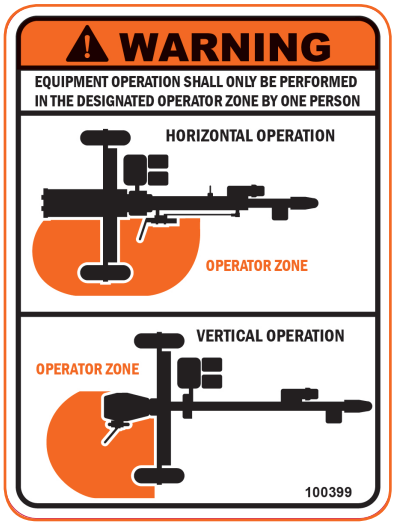

Operator Zone Decal Part # 100399

Pinch Point Decal Part # 100204

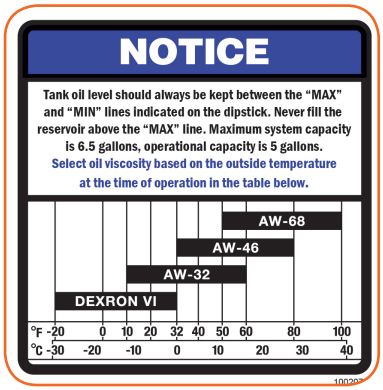

Oil Level Decal Part # 100207

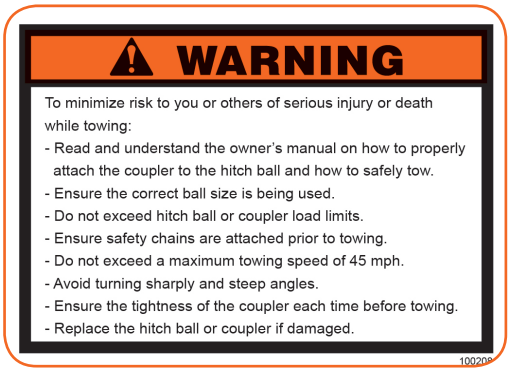

Warning Decal Part # 100208

Important Safety Information

DANGER

GENERAL SAFETY

Failure to follow warnings, cautions, assembly and operation instructions in the Operation Manual may result in serious injury or death.

Read the Operation Manual before operation.

- **Do not** permit children to operate this equipment at any time. Do not permit others that have not read and understood the complete Operation Manual to operate this equipment.
- Keep all people and pets a minimum of 10 feet away from the work area when operating this log splitter. Only the operator is to be near the log splitter during use.
- **Do not** operate the log splitter when under the influence of alcohol, drugs or medication.
- **Do not** allow a person who is tired or otherwise impaired or not completely alert to operate the log splitter.

PREPARATION OF THE LOG

Both ends of the log should be cut as square as possible to prevent the log from rotating out of the splitter during operation.
Do not split logs greater than 25 in. in length.

DANGER

WORK AREA

- **Do not** operate the log splitter on icy, wet, muddy or otherwise slippery ground. ONLY operate your log splitter on level ground. **Operating on a slope could cause the log splitter to roll over or logs to fall off of the equipment, which could result in injury.**
- **Do not** operate the log splitter in an enclosed area. Exhaust fumes from the engine contain carbon monoxide which can be harmful or deadly when inhaled.
- **Do not** move the log splitter over hilly or uneven terrain without a tow vehicle or adequate help.
- Use a tire chock or block on the wheels to prevent movement of the log splitter while in operation.
- Operate the log splitter in daylight or under good artificial light.
- Keep the work area free of clutter. Remove split wood from around the log splitter immediately after each use to avoid potential tripping.

OPERATION OF THE LOG SPLITTER

Operate the log splitter from within the operation zone as shown in the diagrams below. The operator has the safest and most efficient access to the control valve and the beam in these locations.

DANGER

Failure to operate the log splitter in this position can result in serious injury or death.

DANGER

- **Make sure the operator knows how to stop and disengage the controls before operating.**
- **Do not place hands or feet between the log and splitting wedge during forward or reverse stroke. Serious injury or death could result.**
- **Do not** straddle or step over the log splitter during operation.
- **Do not** reach or bend over the log splitter to pick up a log.
- **Do not** attempt to split two logs on top of each other.
- **Do not** attempt to cross split a log.
- **Do not** attempt to load your log splitter when the ram or wedge is in motion.
- Use your hand to operate the control lever on the valve. Do not use your foot, a rope or any extension device.
- **Do not** move the log splitter while the engine is running.
- **Never leave the equipment unattended while the engine is running.** Shut off the engine even if you are leaving the log splitter for a short period of time.
- Avoid contact with the muffler and other hot areas of the engine during operation or after running to prevent burns.

Important Safety Information

REPAIR AND MAINTENANCE

WARNING

- **Do not operate the log splitter when it is in poor mechanical condition or in need of repair.** Frequently check that all nuts, bolts, screws, hydraulic fittings and hose clamps are tight.
- **Do not** alter the log splitter in any manner. Any alteration will void the warranty and could cause the log splitter to be unsafe to operate. Perform all recommended maintenance procedures before using the log splitter. Replace all damaged or worn parts immediately.
- **Do not** tamper with the engine to run it at excessive speeds. The maximum engine speed is preset by the manufacturer and is within safety limits. See Kohler engine manual.
- Remove the spark plug wire before performing any service or repair on the log splitter.
- **Always check the level of hydraulic oil and engine oil before operation.**
- Replacement parts must meet manufacturer's specifications.

HYDRAULIC SAFETY

The hydraulic system of the log splitter requires careful inspection along with the mechanical parts. Be sure to replace frayed, kinked, cracked or otherwise damaged hydraulic hoses or hydraulic components.

- **Check for hydraulic fluid leaks** by passing a piece of paper or cardboard underneath or over the area of the leak. **Do not check for leaks with your hand.** *Fluid escaping from the smallest hole, under pressure, can have enough force to penetrate the skin causing serious injury or death.*
- **Seek professional medical attention immediately if injured by escaping hydraulic fluid**. Serious infection or reaction can develop if medical treatment is not administered immediately.
- Relieve all pressure by shutting off the engine and moving the valve control handle back and forth should it become necessary to loosen or remove any hydraulic fitting.
- **Do not** remove the cap from the hydraulic tank or reservoir while the log splitter is running. *The tank could contain hot oil under pressure which could result in serious injury.*
- **Do not** adjust the hydraulic valve. The pressure relief valve on the log splitter is preset at the factory. *Only a qualified service technician should perform this adjustment.*

FIRE PREVENTION

CAUTION

- **Do not** operate the log splitter near an open flame or spark. *Hydraulic oil and gasoline are flammable and can explode.*
- **Do not** fill the gas tank while the engine is hot or running. Allow the engine to cool before refueling.
- **Do not** smoke while operating or refueling the log splitter. Gas fumes can easily explode.
- Refuel the log splitter in a clear area with no gas fumes or spilled gas. Use an approved fuel container. Replace the gas cap securely. If gasoline has spilled, move the log splitter away from the area of the spill and avoid creating any source of ignition until the spilled gas has evaporated.
- Keep a Class B fire extinguisher on hand when operating this log splitter in dry areas as a precautionary measure against possible flying sparks.
- Drain the fuel tank prior to storage to avoid the potential fire hazard. Store gasoline in an approved, tightly sealed container. Store the container in a cool, dry place.
- Turn the fuel shut off valve on the engine to the "OFF" position before towing the log splitter. Failure to do so may result in flooding the engine.

CAUTION

IMPORTANT NOTE:

This log splitter is equipped with an internal combustion engine and should not be used on or near any unimproved forest-covered, brush-covered or grass-covered land unless the engine's exhaust system is equipped with a spark arrester meeting applicable local or state laws (if any). If a spark arrester is used, it should be maintained in effective working order by the operator. In the state of California a spark arrester is required by law. Other states have similar laws.

Federal laws apply on federal lands. A spark arrester muffler (optional by manufacturer) is available as an accessory at your nearest engine dealer. Always check the legal requirements in your area.

CAUTION

TOWING SAFETY

- Check all local and state regulations regarding towing, licensing, and lights before towing your log splitter.
- Check before towing to make sure that the log splitter is correctly and securely attached to the towing vehicle and that the safety chains are secured to the hitch or bumper of the vehicle with enough slack to allow turning. Always use a Class I, 2" ball with this log splitter.
- **Do not** carry any cargo or wood on the log splitter.
- **Do not** allow anyone to sit or ride on the log splitter.
- Disconnect the log splitter from the towing vehicle before operating it.
- Use care when backing up with the log splitter in tow to avoid jack-knifing. Allow for added length of the log splitter when turning, parking, crossing intersections and in all driving situations.
- **Do not exceed 45 mph when towing your log splitter.** Towing the log splitter at speeds higher than 45 mph could result in loss of control, damage to the equipment, serious injury or death. Adjust towing speed for terrain and conditions. Be extra cautious when towing over rough terrain especially railroad crossings.

1. Assembly Overview

List of tools needed for assembly:

• Hammer • Needle nose pliers • Box cutters • #2 Phillips screw driver
• 6mm hex key wrench • 8mm driver • 13mm wrench or socket wrench
• 17mm wrench or socket wrench • 19mm wrench or socket wrench
• 22mm and 24mm wrenches or cresent wrench • 28mm socket wrench

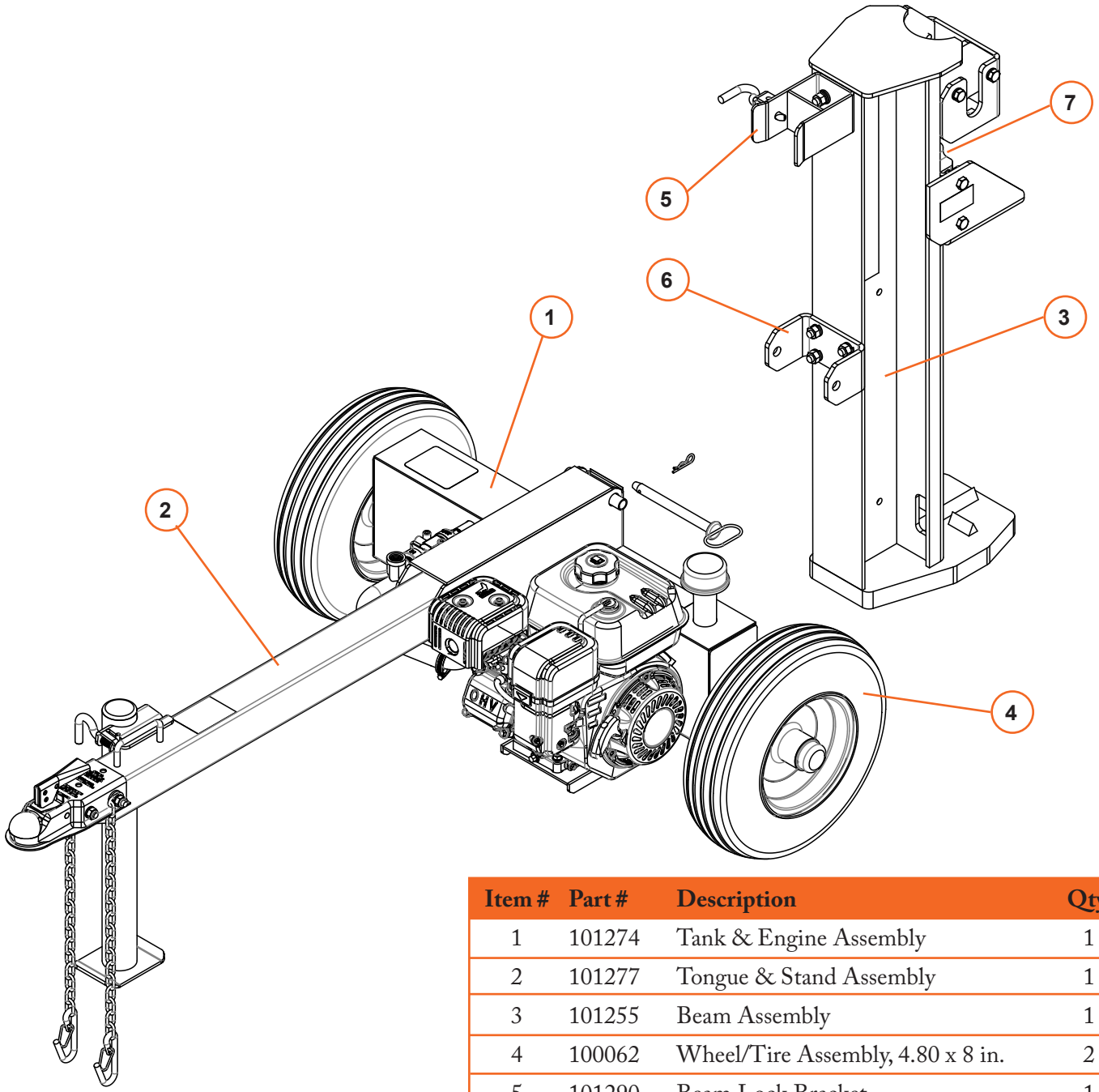

Item #	Part #	Description	Qty.
1	101274	Tank & Engine Assembly	1
2	101277	Tongue & Stand Assembly	1
3	101255	Beam Assembly	1
4	100062	Wheel/Tire Assembly, 4.80 x 8 in.	2
5	101290	Beam Lock Bracket	1
6	100087	Beam Pivot Bracket	1
7	101391	Log Catcher Assembly	1
8	101292	Cylinder/Valve Assembly	1

2. Unpacking the Container

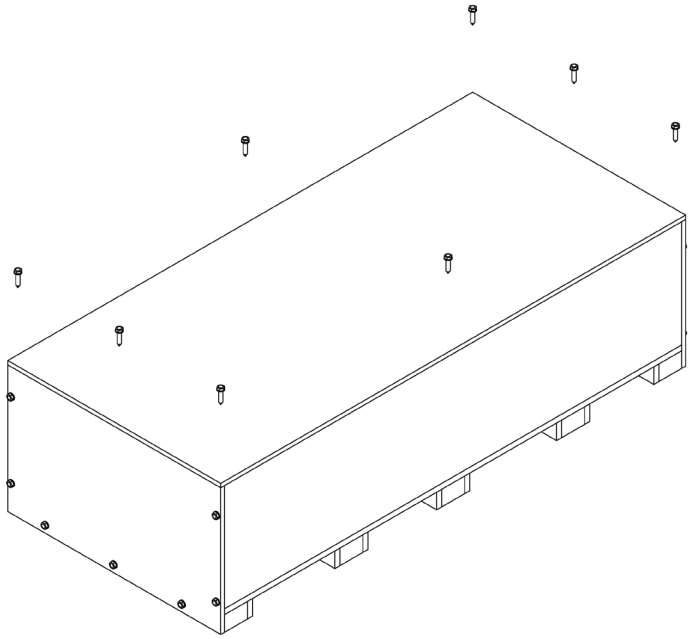

Step 1 Remove top and sides of crate

Use a #2 phillips head and 8mm driver to remove hardware from the plywood shipping crate (shown above). Due to the use of wood staples, it may be necessary to use a hammer and/or a crow bar to fully remove the packaging top and sides.

Step 2 Remove the log catcher box, wheels, cylinder assembly and hardware box from the crate. Then remove the Tongue & Stand Assembly from the crate.

Step 3 **Remove restraining bolts (tee nut bolts) from the beam.** Use a 13mm wrench or socket to remove the two hex bolts that are securing the beam to the crate bottom (as shown below). Please note that the two hex bolts are located diagonally opposed to each other.

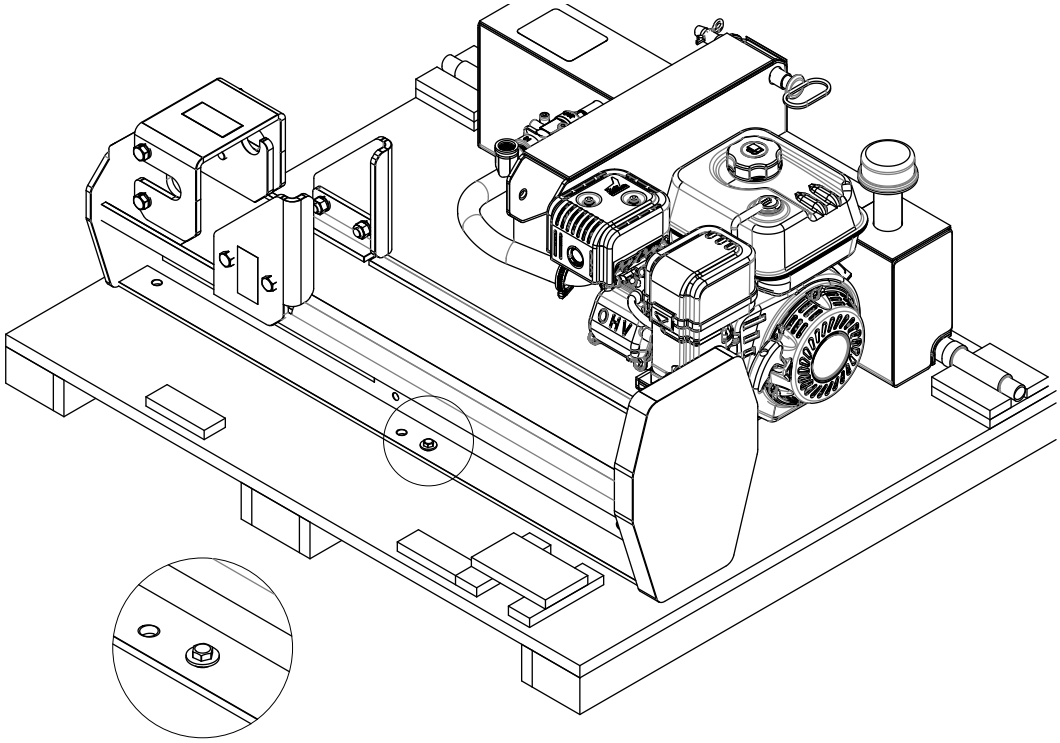

Step 4 **Remove restraining bolts (tee nut bolts) from the tank assembly.**

Step 5 Remove Tank & Engine Assembly from crate, then removce the Beam & Cylinder Assembly. Lift beam & Cylinder Assembly to its vertical position standing on the foorplate.

3. Tank and Wheel Assembly

Installing the wheels:

Step 1 Remove disposable spindle covers and wheel bearing covers.

Step 2 Slide **Wheel/Tire Assembly** ② on to the spindle with valve stem of tire facing outwards.

Step 3 I nstall the **Flat Washer**, 3/4 in. ③ onto the spindle.

Step 4 Thread the slotted **Castle Nut**, ¾ in. ④ onto the spindle. The slotted nut should be attached with a 28mm socket tight enough to eliminate the free-play of the wheel assembly and not tighter. Make sure the wheels can freely rotate. The Castle Nut needs to be oriented to allow for the installation of the **Cotter Pin**, 1/8 in. ⑤.

Step 5 Install the **Cotter Pin**, 1/8 in. 5 through the **Castle Nut**, ¾ in. ④ and spindle. Bend pin ends around spindle to secure its position.

Step 6 Install the **Hub Cap** ⑥ using the **Hub Cap Tool** ⑦. Gently tap on the hub cap tool with a hammer to drive the hub cap into place.

Step 7 Repeat these steps to install the 2nd wheel.

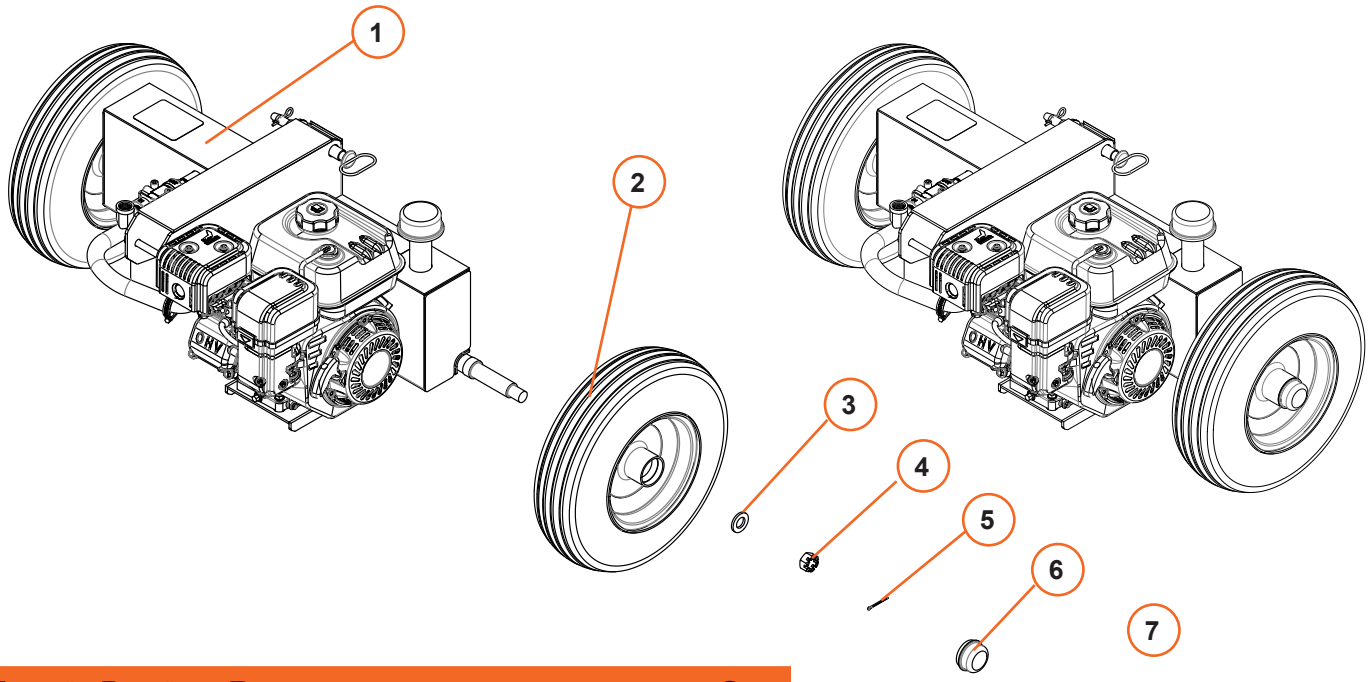

Item #	Part #	Description	Qty.
1	101274	Tank & Engine Assembly	1
2	100062	Wheel/Tire Assembly, 4.80 x 8 in.	2
3	100142	Flat Washer, 3/4 in.	2
4	100140	Castle Nut, 3/4-16, Clear Zinc	2
5	100143	Cotter Pin, 1/8 in. x 1-1/2 in.	2
6	100063	Hub Cap	2
7	100162	Hub Cap Tool	1

DIRTY HAND® TOOLS

4. Tank & Tongue Assembly

Step 1 Attach the **Tongue & Stand Assembly** ② to the **Tank & Engine Assembly** ① with Hex Bolt, M12 x 1.75 x 1.10mm ③; Flat Washer, M12 ④; Lock Washer, M12 ⑤; and Hex Nut, M12 x 1.75 ⑥ in two places. Tighten securely using 19mm socket wrenches.

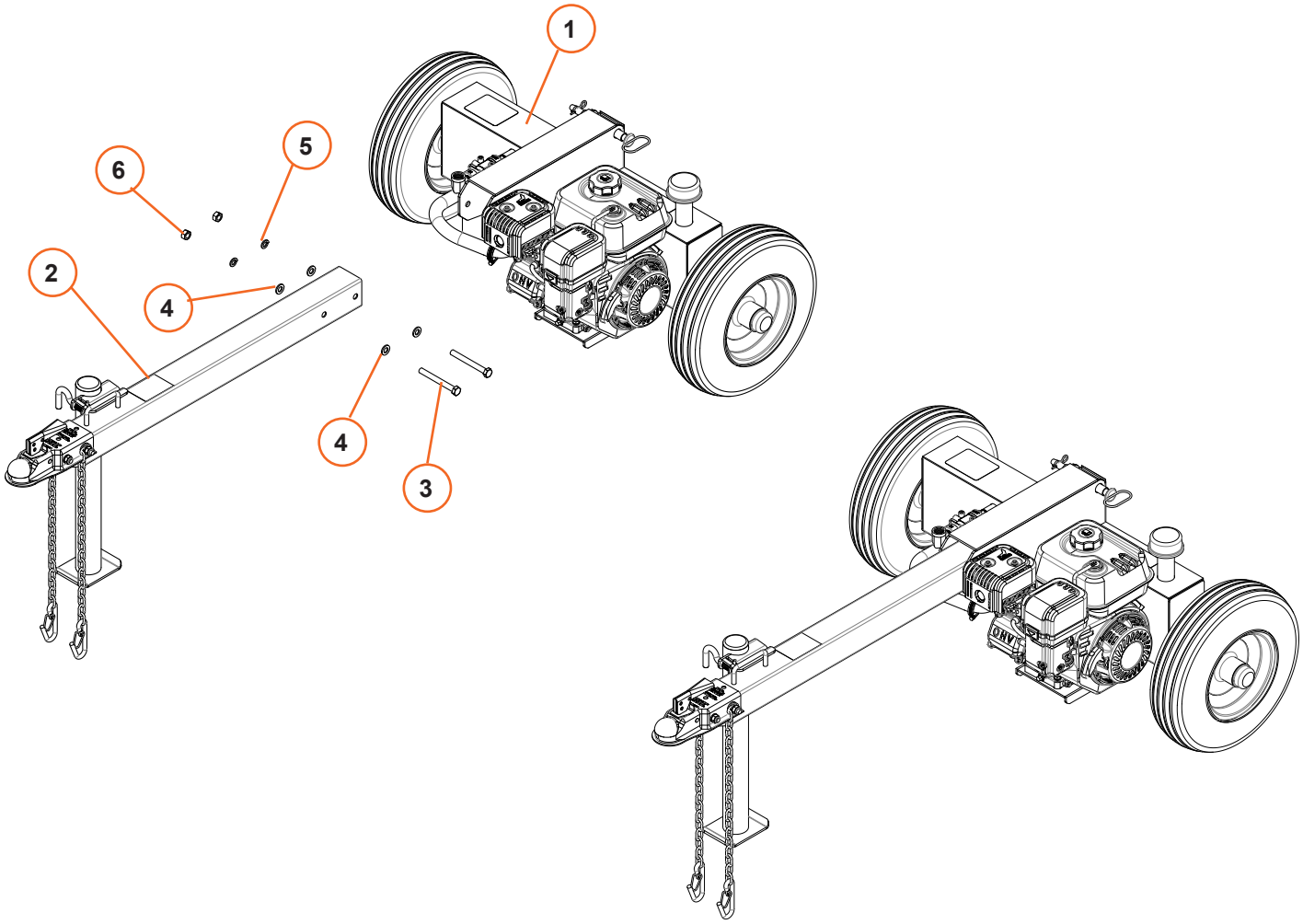

Item #	Part #	Description	Qty
1	101274	Tank & Engine Assembly	1
2	101277	Tongue & Stand Assembly	1
3	100200	Hex Bolt M12 x 1.75 x 1.10mm, G8.8	2
4	100181	Flat Washer, M12	10
5	100023	Lock Washer, M12	8
6	100022	Hex Nut, M12 x 1.75, G8.8	8

6. Beam Bracket Assembly

Step 1 Attach the **Beam Lock Bracket** ② to the **Beam & Cylinder Assembly** ① with Hex Bolt, M12 x 1.75 x 35mm ④; Flat Washer, M12 ⑤; Lock Washer, M12 ⑥; and Hex Nut, M12 x 1.75 ⑦ in two places. Tighten securely using 19mm socket wrenches.

Step 2 Attach the **Pivot Bracket** ③ to the **Beam & Cylinder Assembly** ① using the four bottom holes with Hex Bolt, M12 x 1.75 x 35mm ④; Flat Washer, M12 ⑤; Lock Washer, M12 ⑥; and Hex Nut, M12 x 1.75 ⑦ in four places. Tighten securely using 19mm socket wrenches.

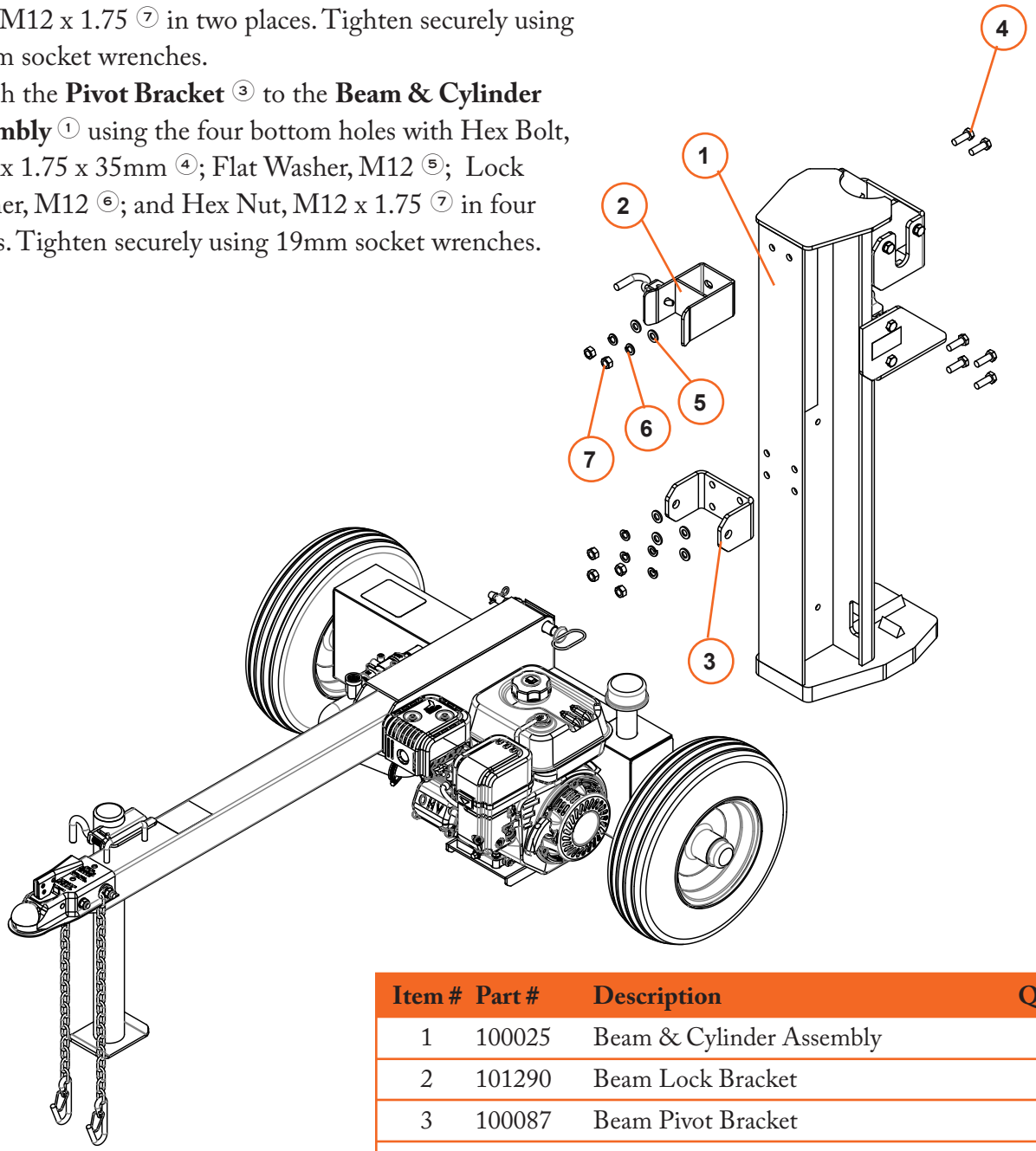

Item #	Part #	Description	Qty.
1	100025	Beam & Cylinder Assembly	1
2	101290	Beam Lock Bracket	1
3	100087	Beam Pivot Bracket	1
4	100021	Hex Bolt, M12 x 1.75 x 35mm, G8.8	6
5	100181	Flat Washer, M12	10
6	100023	Lock Washer, M12	6
7	100022	Hex Nut, M12 x 1.75, G8.8	6

7. Beam & Tank Assembly

Step 1 Rotate the Jack Stand attached to the side of the Tongue Assembly downwards into position by releasing the pin and then securing the release pin.

Step 2 Remove the **Retaining Clip**, 1/8 in. ② and **Hitch Pin**, 5/8 in. x 6-1/4 in. ① from the assembled unit (as shown below).

Step 3 Slowly back the assembled unit up to the Beam & Cylinder Assembly. Align the Tongue Bracket of the assembled unit to the Pivot Bracket of the Beam Assembly.

Step 4 Once the brackets are aligned, install the **Hitch Pin** ① through the brackets then install the **Retaining Clip** ② into the Hitch Pin.

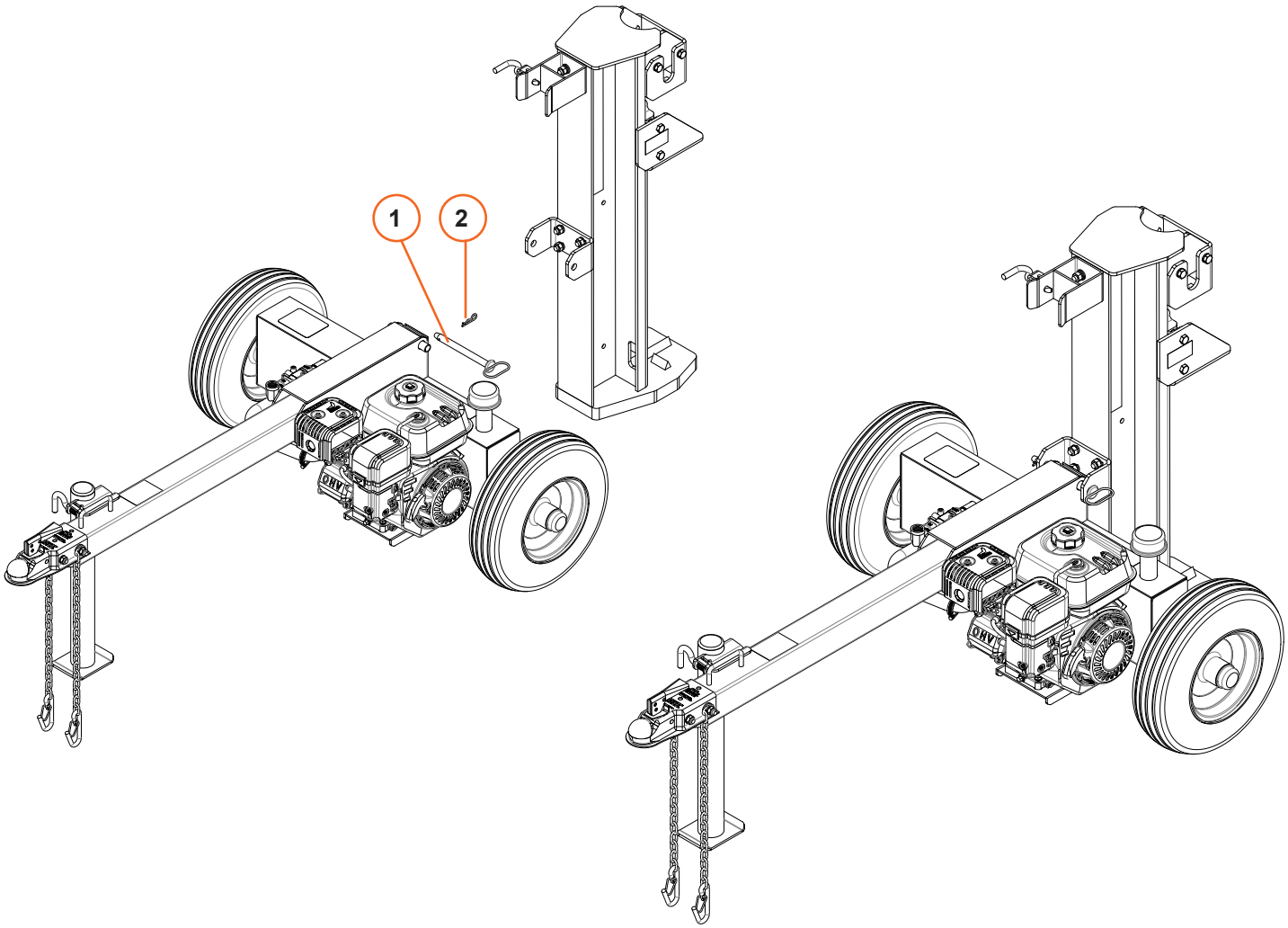

Item #	Part #	Description	Qty.
1	100131	Hitch pin, 5/8 in. x 6 1/4 in.	1
2	100132	R-Clip, 1/8 in., Fits 1/2 in. to 3/4 in.	1

8. Beam & Cylinder Assembly

Step 1 Attach cylinder to beam . . .

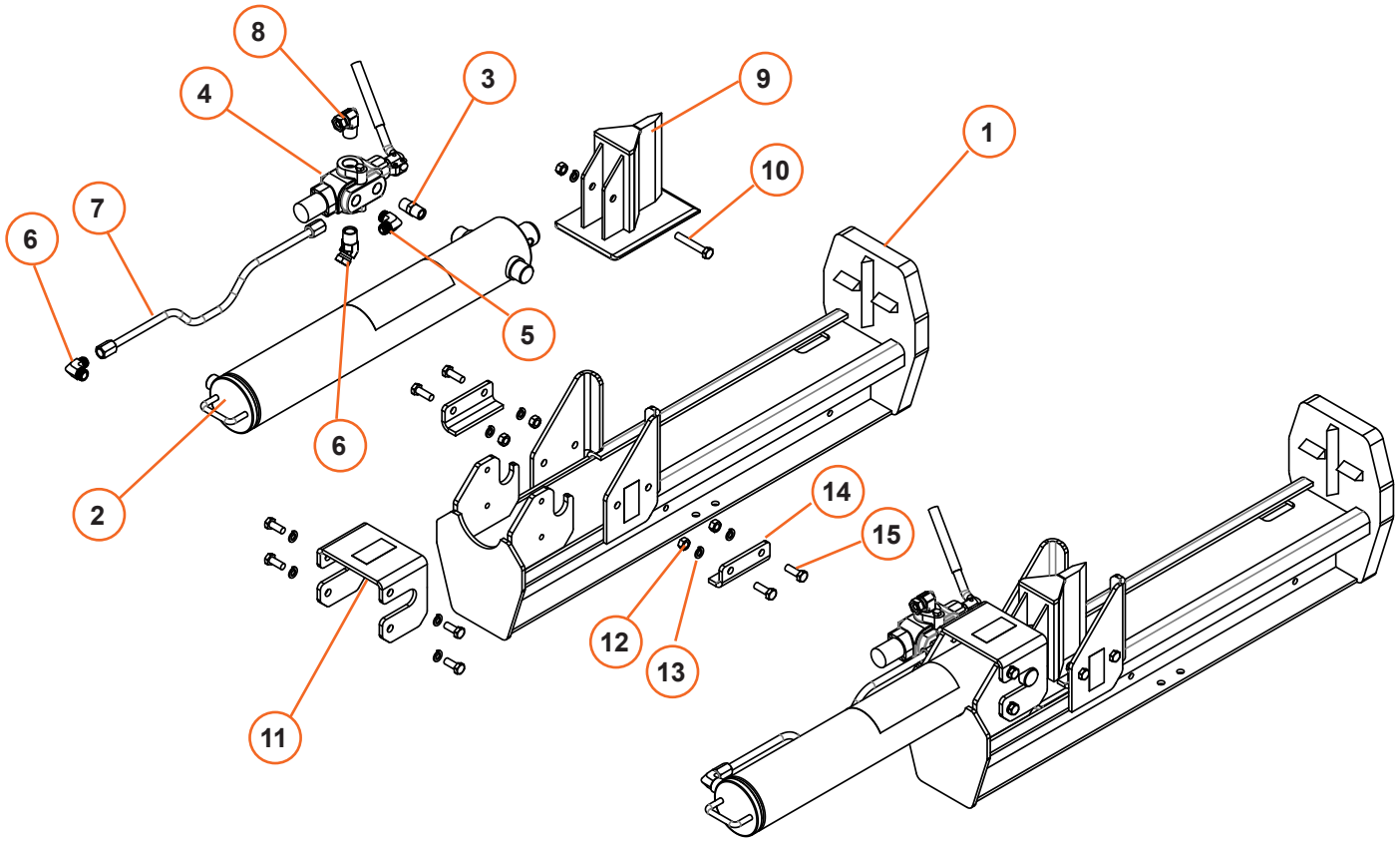

Item #	Part #	Description	Qty.
1	101255	Half Beam	1
2	101257	Cylinder, Half Beam	1
3	100030	Nipple, 1/2 NPT, 1/2 NPT	1
4	100034	Valve, Adjustable Detent, 3400 psi	1
5	100029	Elbow, 1/2 NPT, 1/2 Flare Tube	1
6	100042	Fitting, 45°, M 3/4 NPT to F 1/2 NPT	2
7	100028	Tube, 1/2 OD, Flared, 3/4-16 in. Nuts	1
8	100043	Elbow, M 3/4 NPT to F 1/2 NPT	1
9	100035	Wedge	1
10	100041	Hex Bolt, M12 X 1.75 X .75mm, G8.8	1
11			
12	100022	Hex Nut, M12 x 1.75mm, G8.8	5
13	100023	Lock Washer, M3	5
14			
15	Hex Bolt, M12 x 1.75 x .75mm, G8.8		4

9. Hydraulic Line Connection

Step 1 Apply teflon tape or pipe sealant on the hose fitting threads. install the ends of the two **Hydraulic Hoses** ① and ① to the **Valve** (as shown in detail drawing). Securely tighten the fitting connections using 22mm and 24mm wrenches.

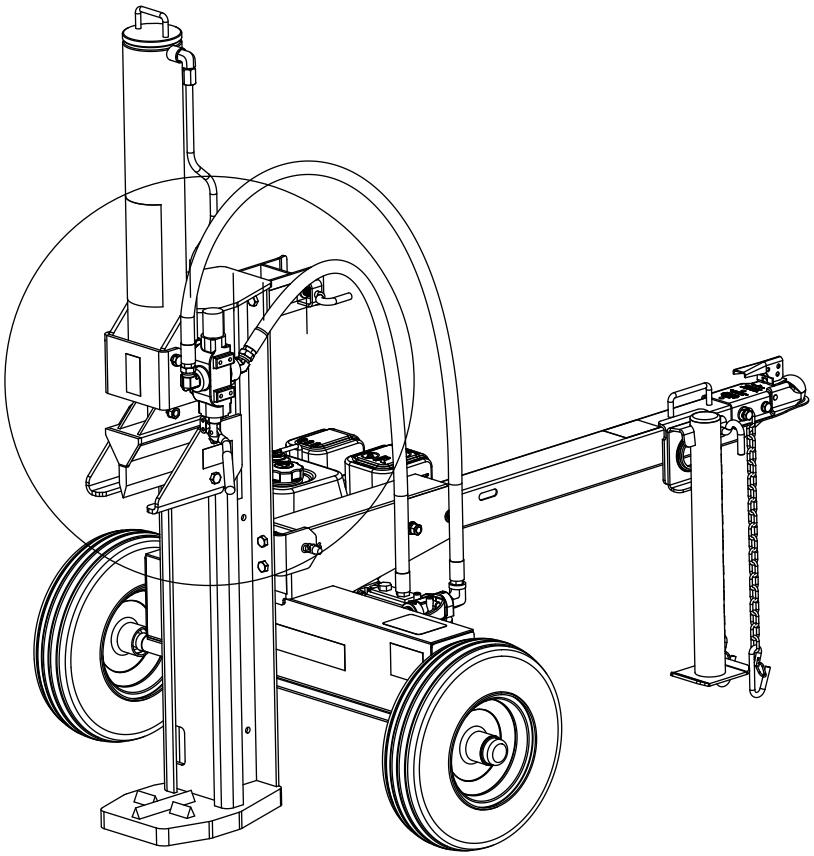

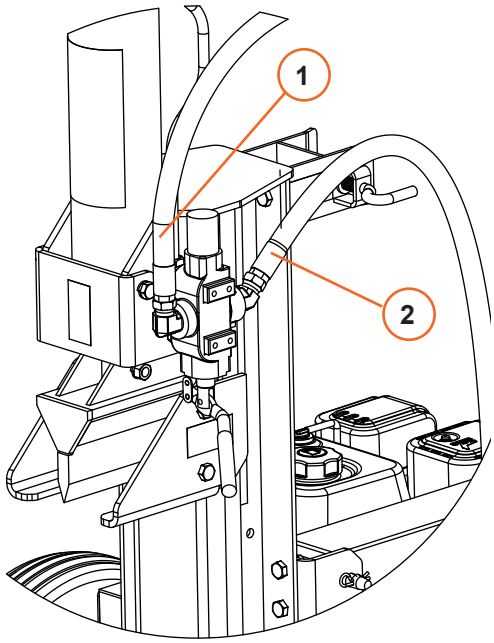

Item #	Part #	Description	Qty.
1	100136	Hydraulic Hose, 1/2 in. x 56 in.	1
2	100137	Hydraulic Hose, 1/2 in. x 38 in.	1

9. Log Catcher Installation

Step 1 Rotate Beam & Cylinder Assembly down from upright position and lock in place with the release pin.

Step 2 Install the **Log Catcher Assembly** ① with Hex Bolts, M10 x 1.5 x 30mm ②; Flat Washer, M10 ③; Lock Washer, M10 ④; Hex Nut, M10 x 1.5 ⑤. Tighten hex nuts securely with a 17mm socket wrench.

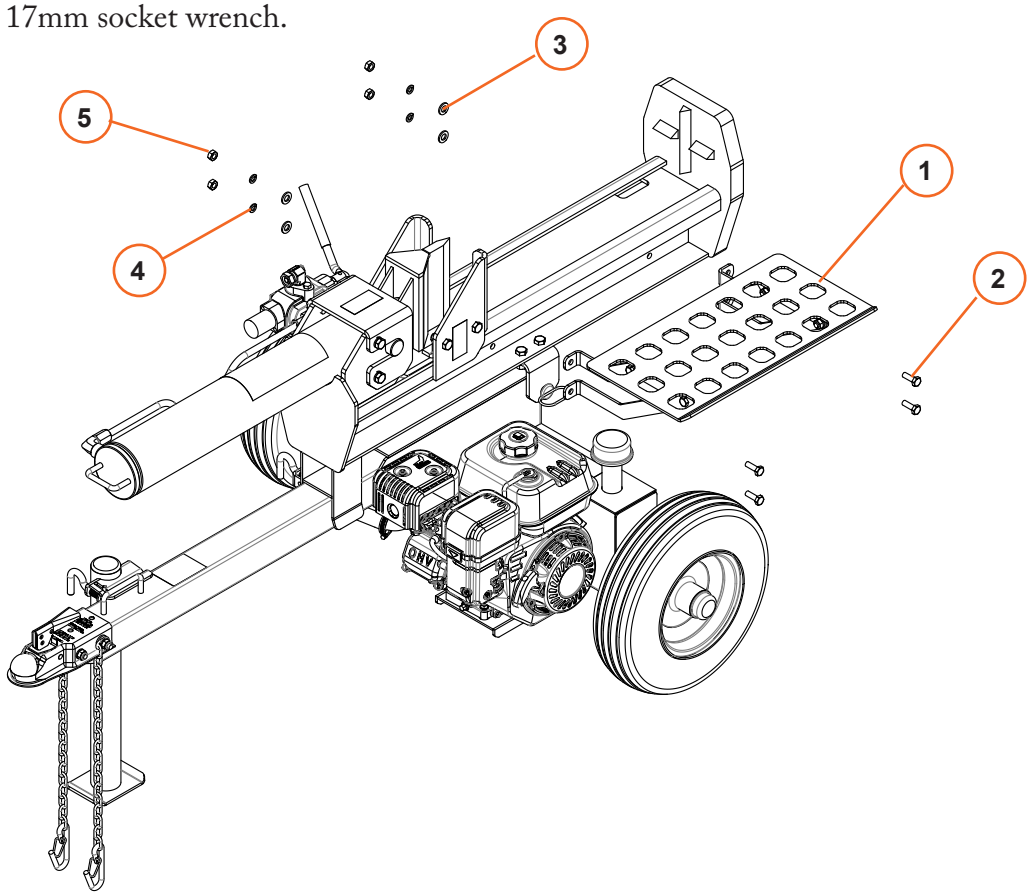

Item #	Part #	Description	Qty.
1	101391	Log Catcher Kit	1
2	100165	Hex Bolt, M10 x 1.5 x 30mm, G8.8	8
3	100161	Flat Washer, M10	8
4	100089	Lock Washer, M10	8
5	100009	Hex Nut, M1 x 1.5, G8.8	8

10. Final Installation Check

Check tightness of all fittings, nuts and bolts prior to filling the log splitter with fluids.

DIRTY HAND® TOOLS

DANGER

WARNING: Read and understand the complete Operation Manual before assembling or using this product! Failure to comprehend and comply with warnings, cautions and instructions for assembly and operation could result in serious injury or death.

Do not permit children to operate this equipment at any time. **Do not** permit others that have not read and understood the complete Operation Manual to operate this equipment. Operation of power equipment can be dangerous. It is the sole responsibility of the operator to understand the assembly and safe operation of this product.

Call our customer service department at **720-287-5182, 1-877-487-8275,** or visit ***www.dirtyhandtools.com*** if you have any questions or concerns about the safe operation of this equipment.

CAUTION

CAUTION: Oil must be added to the hydraulic reservoir and the engine before starting or operation.

STEP 1: Please add approximately 4 gallons of hydraulic fluid. The remaining hydraulic fluid will be added after the cylinder is cycled. AW32 or AW46 hydraulic oil is recommended. Automatic transmission fluid can be substituted instead of hydraulic oil when temperatures are below 32˚F. Use only clean oil and take care to prevent dirt from entering the hydraulic reservoir.

ENGINE OIL RECOMMENDATIONS

Use 4-stroke automotive detergent oil. SAE 10W-30 is recommended for general use. Refer to the SAE Viscosity Grades chart in your engine owner's manual for average temperature ranges. The engine manufacturer recommends using API SERVICE Category SE or SF oil. The engine oil capacity is 20 oz. for Kohler SH265 (22-Ton/27-Ton) and 40 oz. for Kohler CH395 (28-Ton). Always check oil level before starting the engine and keep level full.

Step 2: After the hydraulic reservoir and the engine crankcase are filled with oil, start the engine. The hydraulic pump is self-priming. With the engine running, move the hydraulic valve lever toward the foot plate. This will cause the cylinder to extend and expel air. When the cylinder is fully extended, retract it. Repeat this procedure several times. An erratic movement of the cylinder indicates that there is still air in the system. Add about 1.0 to 1.5 gallons of hydraulic fluid. Five gallons will register just above the top fill line on the dip stick. The total capacity of the entire hydraulic system is 6.5 gallons, 5 gallons of hydraulic fluid is the minimum required to operate.

NOTE: If the tank is overfilled it will expel oil from the breather cap when the cylinder is retracted. Cycle the cylinder again until it has a constant speed which indicates that all air has been expelled.

STARTING INSTRUCTIONS

NOTE: Refer to the Engine Owner's Manual for complete information on starting, maintenance and troubleshooting.

1. Move the fuel valve lever to the ON position.
2. To start a cold engine, move the choke lever to the CLOSE position. To restart a warm engine, leave the choke lever in the OPEN position.
3. Move the throttle lever away from the SLOW position, about 1/3 of the way toward the FAST position.
4. Turn the engine switch to the ON position.
5. Pull the starter grip until you feel resistance, then pull briskly. Return the starter grip gently.
6. If the choke lever has been moved to the CLOSE position to start the engine, gradually move it to the OPEN position as the engine warms up.
7. To stop the engine in an emergency, simply turn the engine switch to the OFF position. Under normal conditions, move the throttle lever to the SLOW position and then turn the engine switch to the OFF position. Then turn the fuel valve lever to the OFF position.

For further information on starting and stopping the engine, refer to your engine owner's manual.

Operating Instructions

CAUTION

CAUTION: Turn Fuel Shut Off Valve to the "Off" position before towing to avoid flooding the engine.

NOTE: The engine's maximum speed is factory preset at 3600 RPM as the no load speed. The throttle should be set at the maximum speed for wood splitting to reach the horsepower required for the pump.

WARNING

WARNING: Review safety information related to operation of the log splitter on pages 4-10 of this manual. Make sure that you have the recommended personal protective equipment described on page 4.

1. Set up the log splitter in a clear, level area and block the wheels. Make sure that the suction port on the tank is always on the lower side of the log splitter.
2. For horizontal operation place a log on the beam against the foot plate. Make sure the log is securely on the foot plate and against the beam. To split wood in the vertical position, release the pin on the beam latch located on the front end of the beam. Carefully tilt the beam up until the foot plate is sitting squarely on the ground and the log splitter is stable. Place the log on the foot plate against the beam. When the beam is returned to the horizontal position make sure the beam latch is securely locked down.
3. With the engine running, depress the valve handle so that the cylinder will drive the wedge into the log. Extend the cylinder until the log splits or to the end of its stroke. If the log has not completely split after the cylinder has reached the end of its extension, retract the cylinder.

IMPORTANT: Leaving the valve in the "actuate" position at the end of the stroke may damage the pump. Always use extra care when splitting logs with unsquare ends.

Store manuals in the Manual Cannister attached to the tongue of the log splitter or file in a safe place for futre reference.

Operating Instructions

NOTE: For operation in wooded areas, obtain a spark arrestor for the exhaust system. See the engine operating and maintenance manual and check with your authorized service center. See also Fire Prevention on page 9 of this manual.

IMPORTANT: To extend the life of the hydraulic cylinder avoid bottoming out the wedge plate to the foot piece. To conform with industry safety recommendations the wedge stops 1/2 inches from the end of the stroke.

TOWING

This log splitter is equipped with pneumatic tires, a Class I coupler (2 in. diameter ball required) and safety chains. Before towing, the safety chains must be secured to the hitch or bumper of the vehicle. Local regulations should be checked regarding licensing, lights, towing, etc. Turn fuel shut off valve on the engine to the "Off" position prior to towing. Failure to do so may result in flooding the engine. Do not exceed 45 mph when towing this log splitter. *See also Towing Safety on page 10 of this manual.*

MAINTENANCE

1. Consult the operating and maintenance instructions of the engine manufacturer for engine care and maintenance.
2. **Always check the oil level of the hydraulic reservoir before operation.** Operating the log splitter without an adequate oil supply will cause severe damage to the pump.
3. Change the oil filter after the first 25 hours of operation. There after change the oil filter every 100 hours or seasonally, whichever comes first.
4. To drain the hydraulic oil, loosen the clamp on the hose coming from the fitting on the bottom of the tank. It is located just to the right of the oil filter.
5. If the wedge becomes dull or nicked, it can be removed and sharpened. Remove the bolt that connects the wedge to the cylinder. The hose from the valve may need to be removed. Carefully lift the cylinder to allow the wedge to slide forward. The wedge can now be lifted off and sharpened.
6. Clean the breather cap after 25 hours of operation. Clean it more often when operated in dusty conditions. To clean, remove the breather cap from the tank and flush with kerosene or liquid detergent to remove the dirt.
7. *See Repair and Maintenance on the engine's operation manual.*
8. All replacement parts must meet manufacturer's specifications.

Tank & Engine Assembly

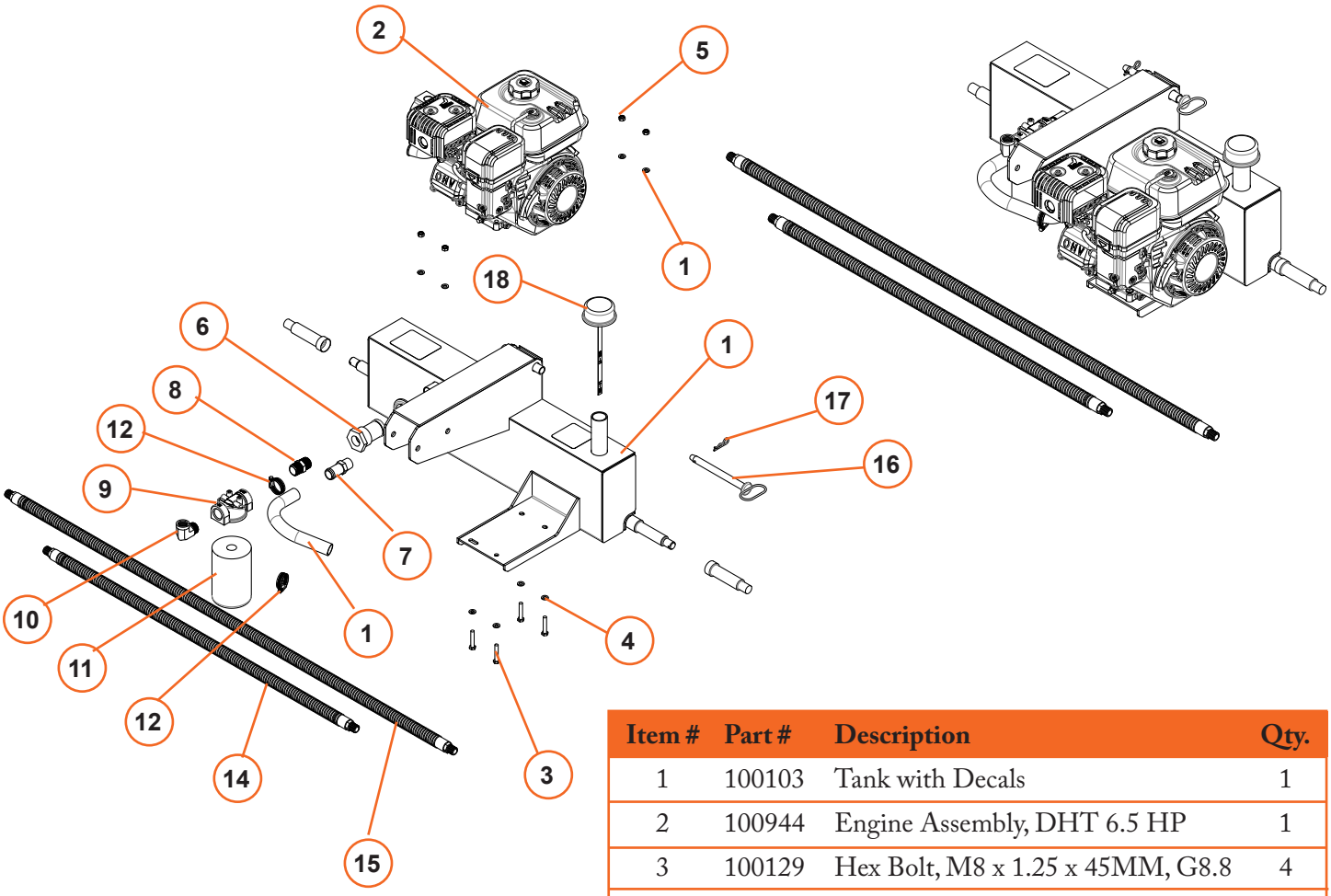

Item #	Part #	Description	Qty.
1	100103	Tank with Decals	1
2	100944	Engine Assembly, DHT 6.5 HP	1
3	100129	Hex Bolt, M8 x 1.25 x 45MM, G8.8	4
4	100130	Flat Washer, M8	8
5	100128	Hex Nut, Nylock, M8 x 1.25, G8.8	4
6	100105	Suction Filter	1
7	100111	Fitting, 3/4 NPT to 1 in. Tube	1
8	100112	Fitting, M 3/4 NPT, M 3/4 NPT	1
9	100117	Filter Base, 3/4 NPT, 1-12 UNF	1
10	100118	Elbow M 3/4 NPT, F 1/2 NPT	1
11	100116 100448	Hydraulic Oil Filter (DHT logo) Hydraulic Oil Filter (Generic logo)	1 1
12	100138	Hose Clamp, 15/16 in. to 1-1/4 in.	2
13	100135	Suction Line Tube, Wire Reinforced	1
14	100137	Hydraulic Hose, 1/2 in. x 38 in.	1
15	100136	Hydraulic Hose, 1/2 in. x 56 in.	1
16	100131	Hitch Pin, 5/8 in. x 6 1/4 in.	1
17	100132	R-Clip, 1/8 in., 1/2 in. to 3/4 in.	1
18	100110	Vent Cap Assembly	1

Pump & Engine Assembly

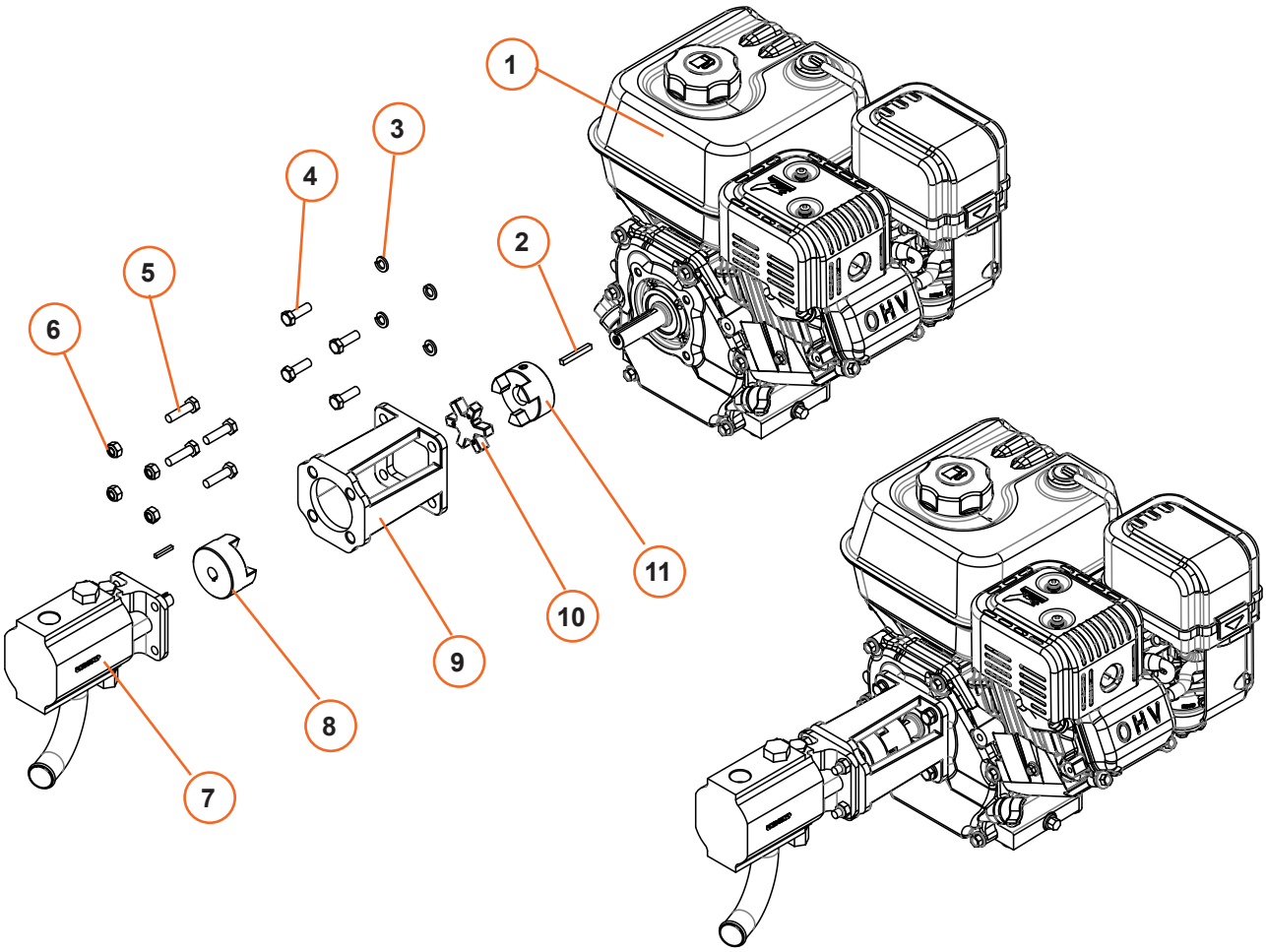

Item #	Part #	Description	Qty.
1	100372	Engine, DHT 6.5 HP	1
2	100159	Bar, Key Stock, SQ 3/16 in. x 1-1/2 in.	1
3	100127	Lock Washer, M8	4
4	100486	Hex Bolt, 5/16 in.-24 x 1.25 in., Z5	4
5	100126	Hex Bolt, M8 x 1.25 x 30mm, G8.8	4
6	100128	Hex Nut, Nylock, M8 x 1.25, G8.8	4
7	100158	Pump, 2 Stage, 13 GPM	1
8	100397	Jaw Coupler Assembly, 1/2 in. Bore, L090	1
9	100016	Pump Mount, 92mm BC	1
10	100124	Jaw Spider Coupler, L090	1
11	100398	Jaw Coupler Assembly, 3/4 in. Bore (22/27-Ton)	1

DIRTY HAND® TOOLS

Beam Assembly

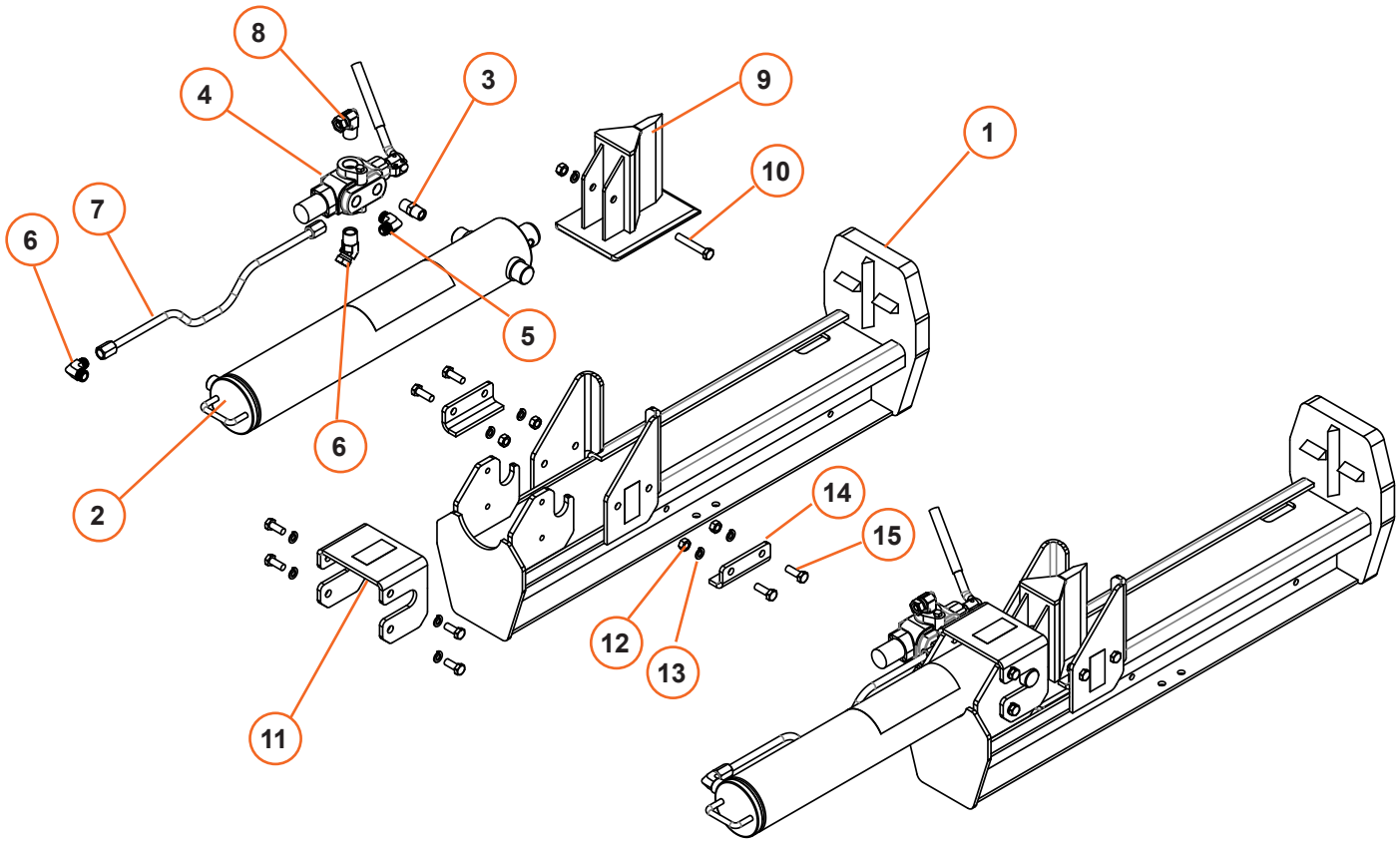

Item #	Part #	Description	Qty.
1	101255	Half Beam	1
2	101257	Cylinder, Half Beam	1
3	100030	Nipple, 1/2 NPT, 1/2 NPT	1
4	100034	Valve, Adjustable Detent, 3400 psi	1
5	100029	Elbow, 1/2 NPT, 1/2 Flare Tube	1
6	100042	Fitting, 45°, M 3/4 NPT to F 1/2 NPT	2
7	100028	Tube, 1/2 OD, Flared, 3/4-16 in. Nuts	1
8	100043	Elbow, M 3/4 NPT to F 1/2 NPT	1
9	100035	Wedge	1
10	100041	Hex Bolt, M12 X 1.75 X .75mm, G8.8	1
11			
12	100022	Hex Nut, M12 x 1.75mm, G8.8	5
13	100023	Lock Washer, M3	5
14			
15	Hex Bolt, M12 x 1.75 x .75mm, G8.8		4

Tongue Assembly

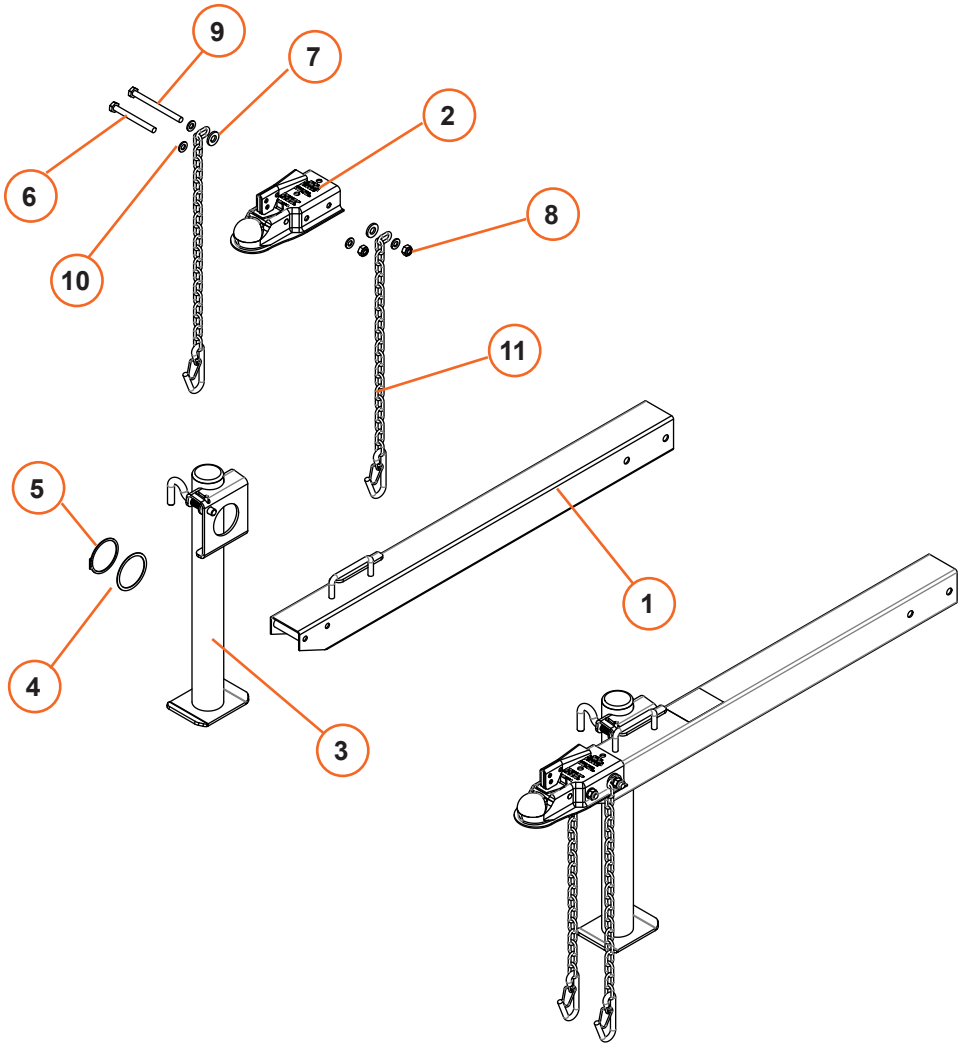

Item #	Part #	Description	Qty.
1	101276	Tongue	1
2	100061	Ball Coupler Assembly, 2 in.	1
3	100080	Tongue Stand	1
4	100070	Shim, OD 75mm, ID 64mm x 1mm	1
5	100069	Retaining Ring, External, 63mm Shaft	1
6	100066	Hex Bolt, M10 x 1.5 x 100mm, G8.8	1
7	100161	Flat Washer, M10	4
8	100068	Hex Nut, Nylock, M10 x 1.5, G8.8	2
9	100067	Hex Bolt, M10 x 1.5 x 120mm, G8.8	1
10	100077	Flat Washer, 1/2 in.	2
11	100047	Safety Chain	2

DIRTY HAND® TOOLS

Notes

Notes

DIRTY HAND® TOOLS

Notes

Specifications

SKU/Part No.	101278
Maximum Splitting Force	22-Tons**
Engine[1]	6.5 HP 196CC*
Maximum Log Length	25"
Cycle Time, Down & Back	10.9 Seconds**
Cylinder	4" Dia. x 24" Stroke
Pump	Two Stage 13 GPM
Wedge	8" High Heat Reated Steel
Beam	8" Foot Plate & Removable Stripper Plates
Hydraulic Capacity	6.5 Gallons Maximum System/5 Gallons Operational
Valve	Auto Return with Adjustable Detent
Wheels	D.O.T. Approved 16" O.D. Road Tires
Coupler	2" Ball with Safety Chains
Shipping Weight	475 Lbs.
Weight with Fluids	514 Lbs.
Accessories	4-Way Wedge, Fenders, Storage Cover
Replacement Filters	Part # 100116 Return Filter
	Part # 100105 Suction Screen
Warranty	3 Year / 2 Year / 1 Year, Limited

[1] EPA/CARB Approved/50 State Legal

*As rated by engine manufacturer

**Tonnage and cycle times may vary dependent upon mechanical and environmental conditions.

Warranty

IMPORTANT NOTICE

We, the manufacturer, reserve the right to change the product and/or specifications in this manual without notification. The manual is for information usage only and the pictures and drawings depicted herein are for reference only.

Warranty Repair and Service

Do not return this product to the store for warranty issues or repair. Call our customer service department at **720-287-5182, 1-877-487-8275,** or visit ***www.dirtyhandtools.com*** for the location of the nearest service center.

Record the information below for future reference.

Model No. _____

Serial No. _____

Date of Purchase _____

Place of Purchase _____

Dirty Hand Tools is a brand of

FrictionlessWorld

510 Pierce Avenue • Suite B
Louisville, CO 80027 • 720-287-5182

For Service or Questions

Call 1-877-487-8275

720-287-5182

www.dirtyhandtools.com